LED INGROUND LIGHT

INSTALLATION AND OPERATION MANUAL



Lighting Effect Display





Product Dimensions





Light Fitting Specifcation	FOREST INGROUND-B	FOREST INGROUND-C
Light Dimension	102*182*121MM	102*262*121MM
Light Source Power	24W	36W
CCT	2700-6500K/RGBW	
CRI	>80	
IP Rating	IP67	
Beam	50°	
Materials	Aluminum Die-casting housing with Tempered safety glass	
Finishes	Aluminum/Black/Optional RAL color	

Address
Address: C T CORPORATION SYSTEM 28 LIBERTY STREET, NEW YORK, NY 10005
Email
Email: sales@cregini.com
Website: www.cregini.com
Phone Call
Phone: +1(224)378-4648

IES

LUMINOUS INTENSITY DISTRIBUTION

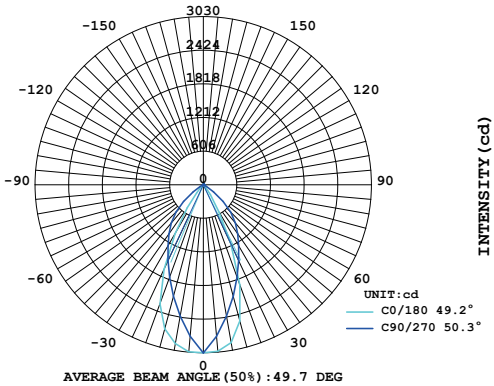

AVERAGE BEAM ANGLE(50%):49.7 DEG

LUMINOUS INTENSITY DISTRIBUTION

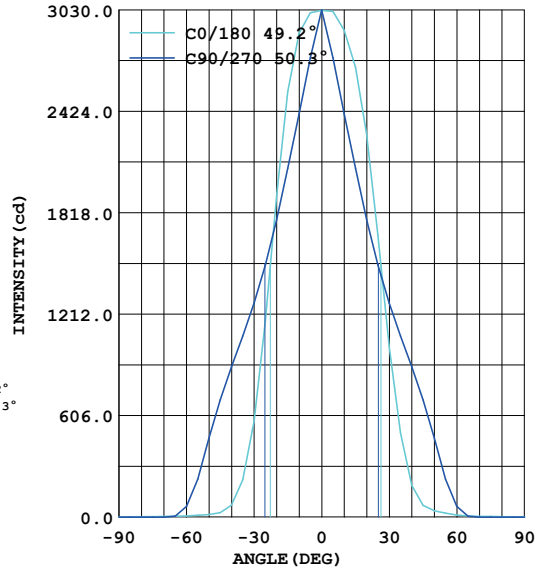

Luminaire Arrangement

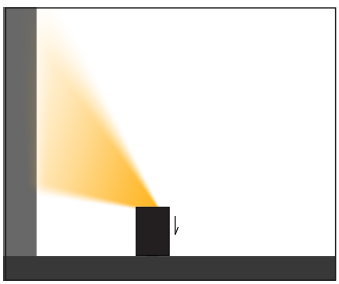

Lens Wallwashers

During the installation of the FOREST inground light, it is required to strictly ensure that the lens is perpendicular to the wall. The installation method of the lamps must be strictly followed according to the installation instruct ion below.

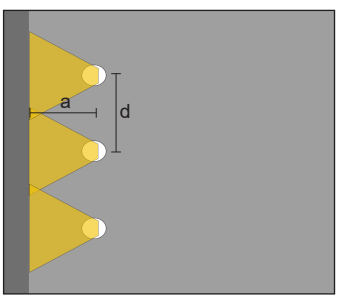

The recommended installation distance (a) from the FOREST inground light to the wall is approximately 30-50 cm, with the exact distance adjustable based on on-site conditions.

For good longitudinal uniformity,the luminaire spacing (d) of FOREST inground light is determined by the length of the lamp fixture.

Address
Address: C T CORPORATION SYSTEM 28 LIBERTY STREET, NEW YORK, NY 10005
Email
Email: sales@cregini.com
Website: www.cregini.com
Phone Call
Phone: +1(224)378-4648

Installation Instructions

1.

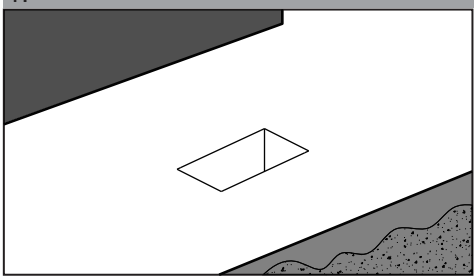

2.

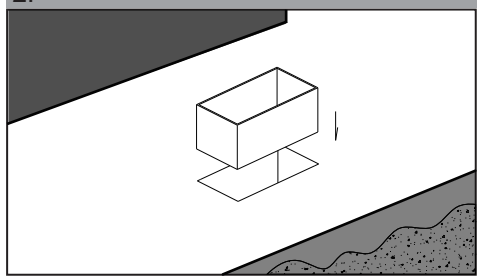

3.

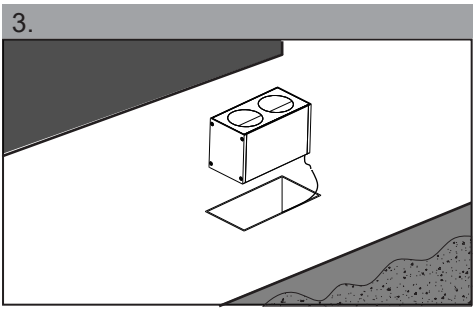

4.

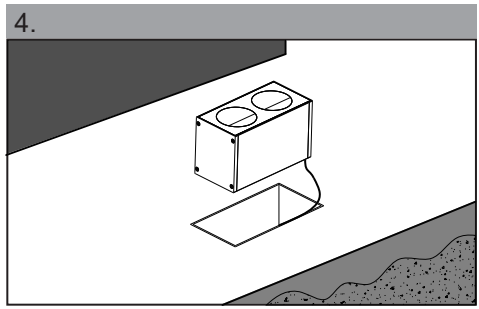

5.

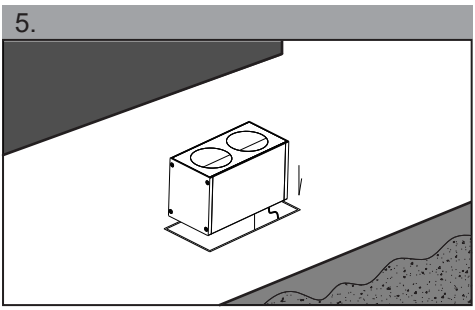

6.

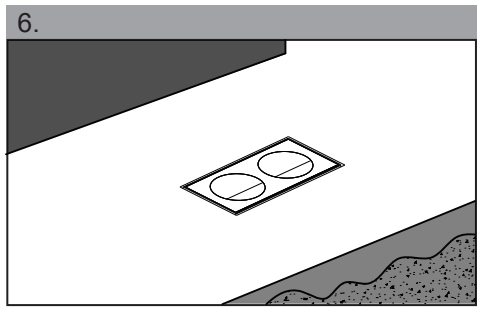

Address: C T CORPORATION SYSTEM 28 LIBERTY STREET, NEW YORK, NY 10005

Email: sales@cregini.com
Website: www.cregini.com

Phone: +1(224)378-4648

Power Supply and Electrical Installation(AC)

Mono-color Wiring Diagram (85-265V):

In this setup, the light is plug-and-play, ready for use with direct mains power connection. No additional control is required as it is a constant-on setup.

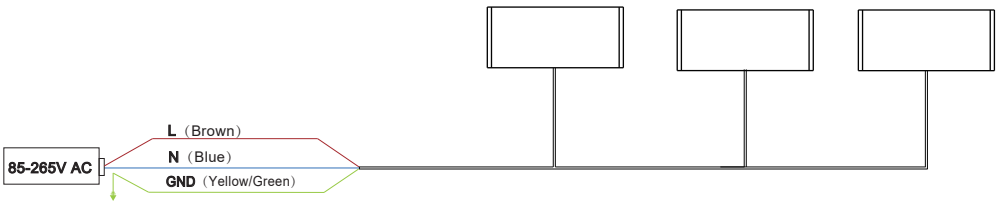

Power Supply and Electrical Installation(DC)

Mono-color Wiring Diagram (24V/DC):

In this setup, the light connects directly to the power supply. The power of a CC circuit is not more than 80% of the power supply. No additional control is required as it is a constant-on setup.

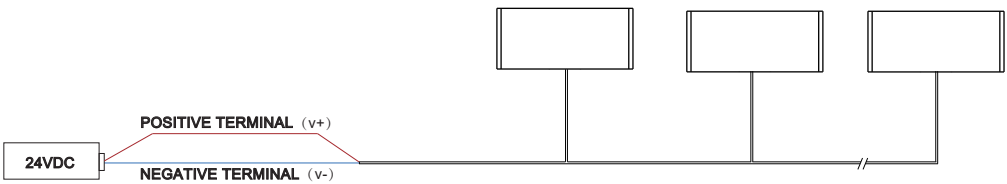

DMX512 Wiring Diagram (24V/DC):

This connects the wiring to the light fixture as described. The signal cable (3 wires for DMX, P(coding), DMX+, DMX-) is connected from the controller's output to the fixture's DMX input (IN) port. Multiple lights can be daisy-chained by connecting the DMX OUT one fixture to the DMX IN of the next. Terminate the last fixture in the chain with a DMX terminator (120 ohms) to avoid signal reflection.

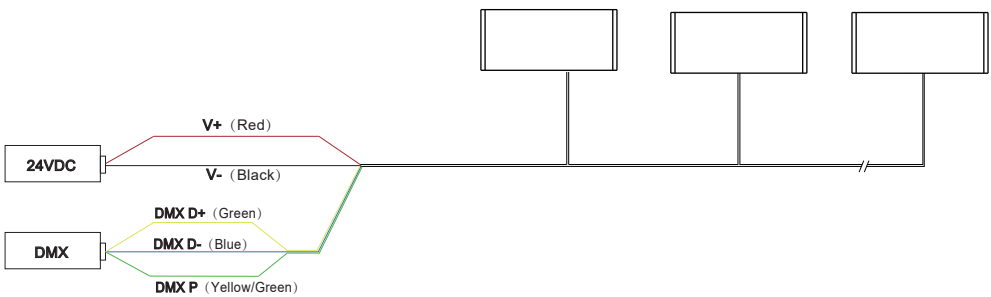

Address
Address: C T CORPORATION SYSTEM 28 LIBERTY STREET, NEW YORK, NY 10005
Email
Email: sales@cregini.com
Website: www.cregini.com
Phone Call
Phone: +1(224)378-4648

WARNINGS AND REMARKS FOR INSTALLATION AND MAINTENANCE

Safety Instructions

To reduce risks of death, injury or property damage from fire, electric shock, falling parts, cuts, abrasions and other hazards, please read all warnings and instructions provided with the luminaire (including packaging and fixture labels).
The light source may only be replaced by the manufacturer, its service agent, or a similarly qualified professional.
Always power off before replacement to avoid electric shock.
The manufacturer accepts no liability for damage caused by improper use or installation.

Installation

Use high-quality components only. Avoid touching the LED light opening during installation or relamping.

IMPORTANT ⚠

To ensure secure operation, the luminaire housing must positioned precisely in relation to the mounting plate.

Cleaning And Maintenance

Clean the luminaire regularly with a clean, lint-free cleaners from dirt. Please do not clean the luminaire with using high-pressure liquids.

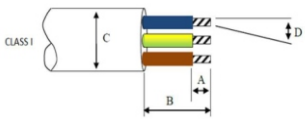

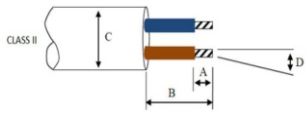

	Cable Details
A	6÷7 mm
A	< 25 mm
C	Pg11: 5÷10 mm PG13,5: 6÷12 mm(for DALI)
D	≤2.5 mmq

ATTENTIONS ⚠

Do not disassemble any parts.
Ground wire must be grounded (impedance <10Ω).
Wire must strictly per instructions to avoid failure/debug issues.
Do not pull exposed wires (risk of poor contact).
Store at ≤70℃10%-85% humidity. Use at -20℃~+40℃.
Installation/maintenance by professionals only.

WARNING ⚠

Confirm lamp parameters before installation.
Use correct wire diameter and series/parallel connection to avoid overheating from excessive current.
Optical radiation complies with IEC62471-2006 "exempt level".
Install/use strictly per instructions; do not modify lamp structure or internal parts.
Protect wires from sharp edges to avoid damage/wear.
Only electrical personnel should install the luminaire configuration device.
Check insulation of wires/components after installation.
Do not use in severely corrosive, water-submerged environments (e.g., acids/alkalis) or cover with thermal insulation pads.
Cut off power before installation to prevent electric shock.
Ensure voltage is within rated range.

Address
Address: C T CORPORATION SYSTEM 28 LIBERTY STREET, NEW YORK, NY 10005
Email
Email: sales@cregini.com
Website: www.cregini.com
Phone Call
Phone: +1(224)378-4648