LED INGROUND LIGHT

INSTALLATION AND OPERATION MANUAL



Lighting Effect Display





Product Dimensions

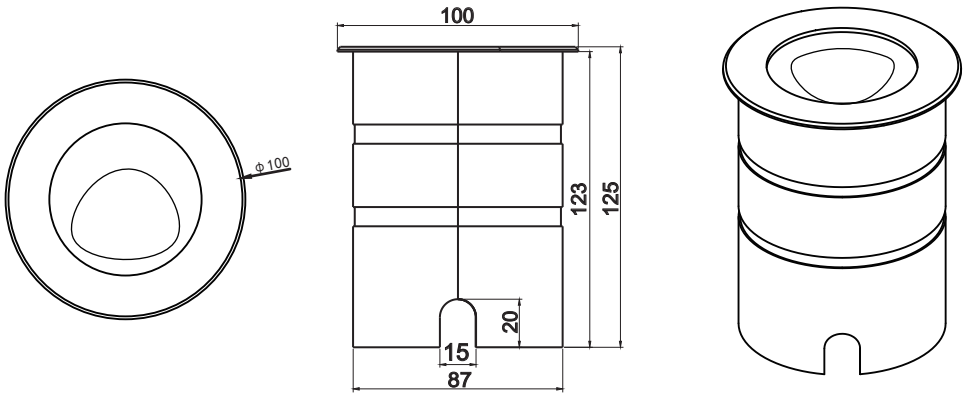

Light Fitting Specifcation	AQUA
Light Dimension	φ100*H125
Light Source Power	10W
CCT	2700-6500K/RGBW
CRI	＞80
IP Rating	IP67
Beam	27°
Materials	Aluminum housing with Tempered safety glass 304/316ss cover
Finishes	Aluminum/Black/Optional RAL color

Address

Address: C T CORPORATION SYSTEM 28 LIBERTY STREET, NEW YORK，NY 10005

Send an Email

Email: sales@cregini.com
Website: www.cregini.com

Phone Call

Phone: +1(224)378-4648

IES

LUMINOUS INTENSITY DISTRIBUTION

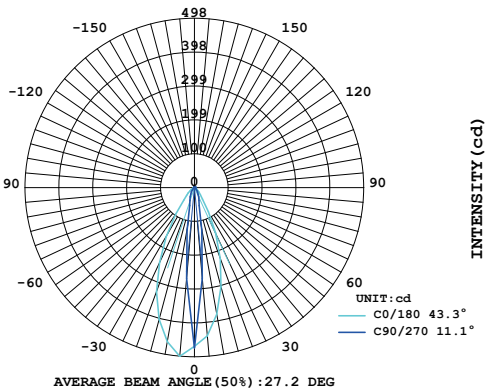

AVERAGE BEAM ANGLE(50%):27.2 DEG

LUMINOUS INTENSITY DISTRIBUTION

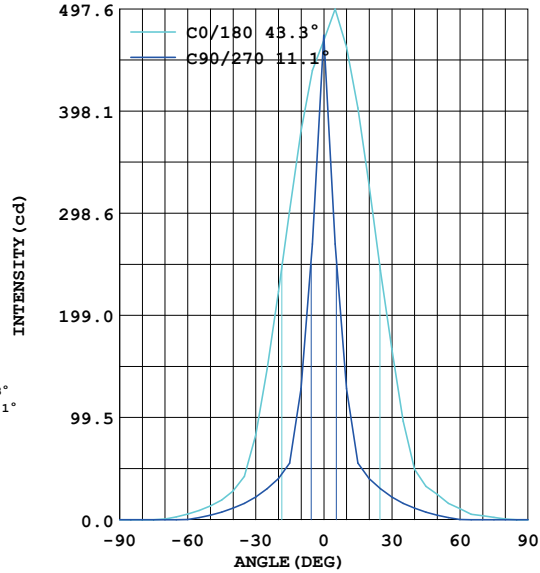

AEVERAGE AND CENTER E Figure

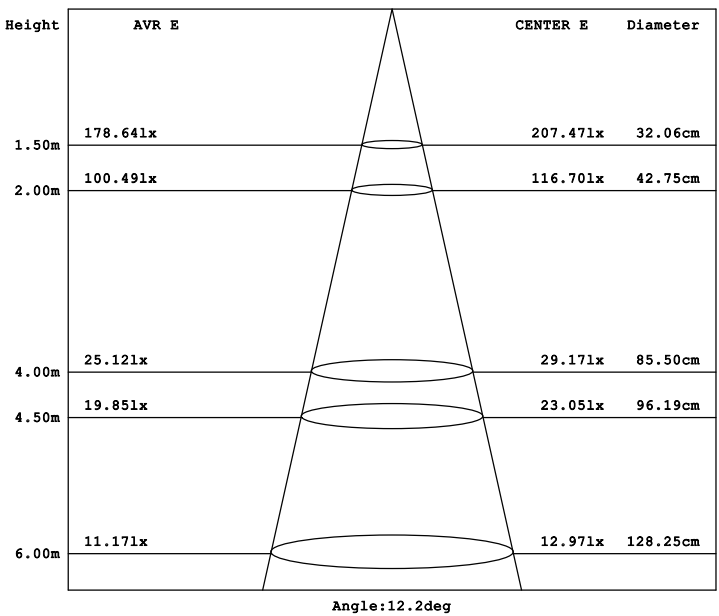

Angle:12.2deg

Address: C T CORPORATION SYSTEM 28 LIBERTY STREET, NEW YORK, NY 10005

Email: sales@cregini.com
Website: www.cregini.com

Phone: +1(224)378-4648

Installation Instructions

-Class I luminaire: protective earth connection is mandatory

-Replace any damaged protective glass
-Glass specification: clear float glass, safety tempered

-Disposal as ordinary urban waste is prohibited
-Separate collection is mandatory for the luminaire at its end-of-life

IK10 IP67 DALI DMX

Attention

Retain the instructions

The article is suitable for indoor and outdoor use

-This electronic luminaire is sensitive to voltage surges. Installation of an overvoltage protection device within the electrical supply system mitigates such transients and safeguards the equipment against damage.

Do not use high pressure cleaners

NB: These installation instructions shall be handed over to the end user to ensure proper maintenance.
The luminaire must not be tampered with or modified. It shall be installed and operated as supplied, in full compliance with national electrical installation regulations. Any non-compliant installation shall render all warranties void. The manufacturer accepts no liability for damage arising from improper installation.

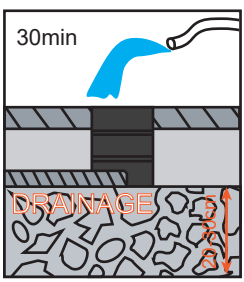

Always lay a 20–30 cm layer of drainage gravel and verify its functionality: pour water into the drainage channel and confirm it drains fully within 30 minutes.

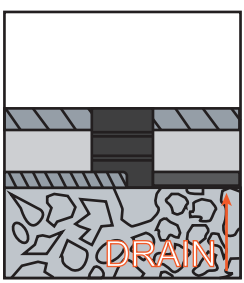

Should drainage prove inadequate, design an additional drainage system.

Address: C T CORPORATION SYSTEM 28 LIBERTY STREET, NEW YORK, NY 10005
Email: sales@cregini.com
Website: www.cregini.com
Phone: +1(224)378-4648

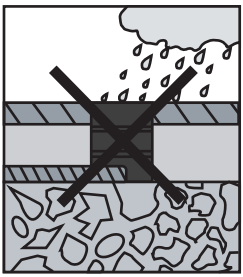

Do not install the luminaires during rainfall, fog or periods of high humidity.

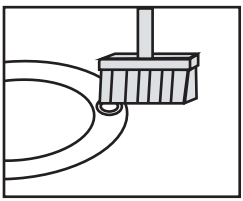

Periodically clean the luminaires to remove accumulated soil from protective cages and screw heads.

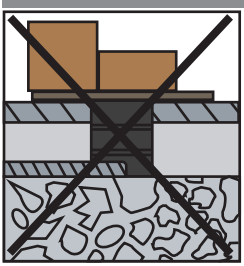

Do not cover any exposed sections of the luminaires.

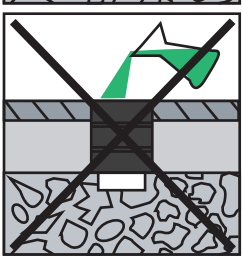

Any component not enclosed within the recessing box must not come into direct contact with the ground or corrosive chemical agents.

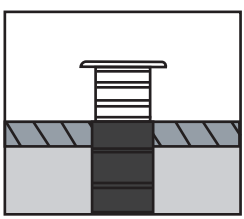

Upon initial installation and whenever the luminaire is opened for maintenance, allow it to operate for 30 to 60 minutes prior to final securing.

Installation Instructions

1

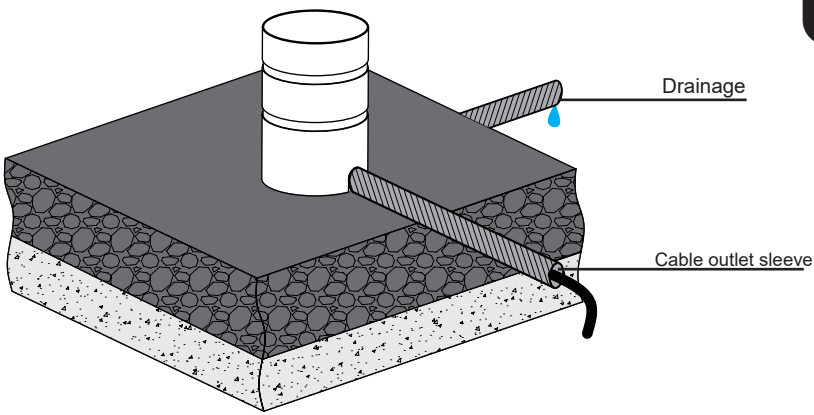

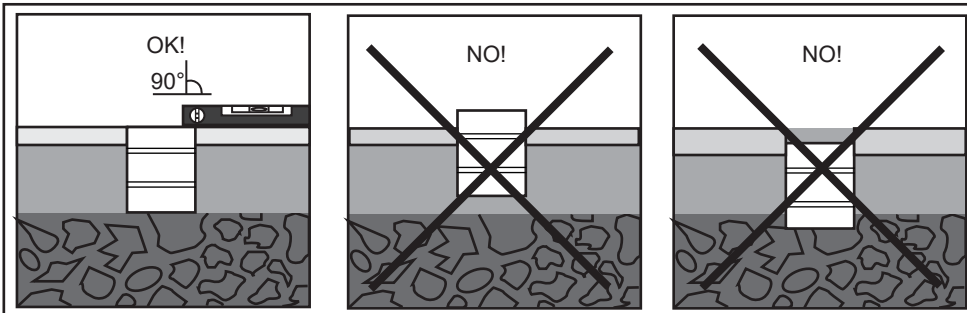

2

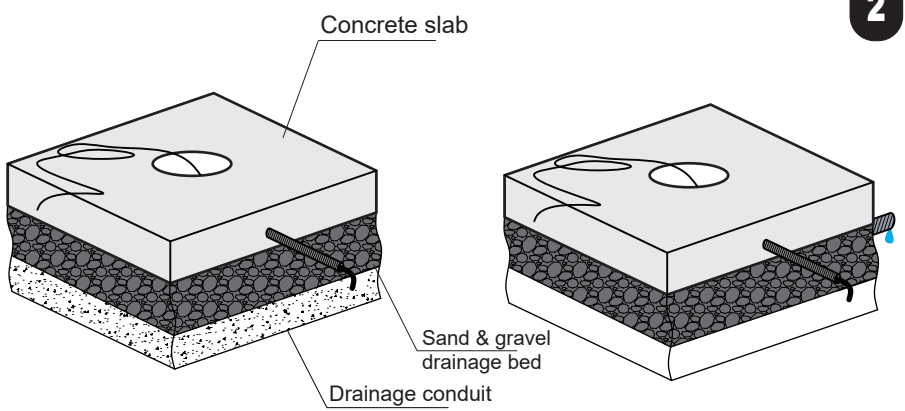

Address: C T CORPORATION SYSTEM 28
LIBERTY STREET, NEW YORK, NY 10005

Email: sales@cregini.com
Website: www.cregini.com

Phone: +1(224)378-4648

Installation Instructions

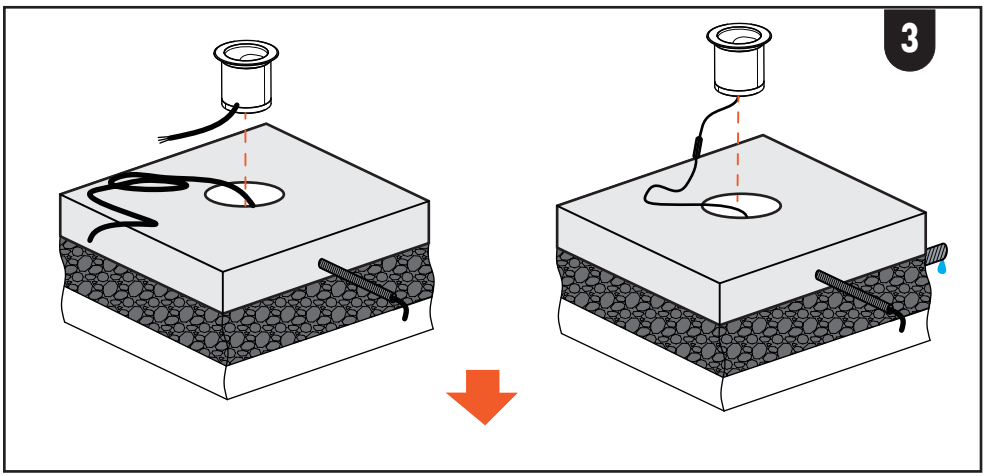

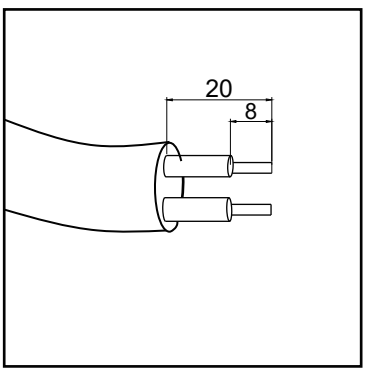

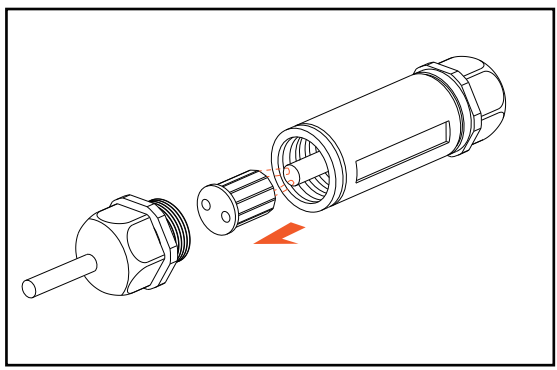

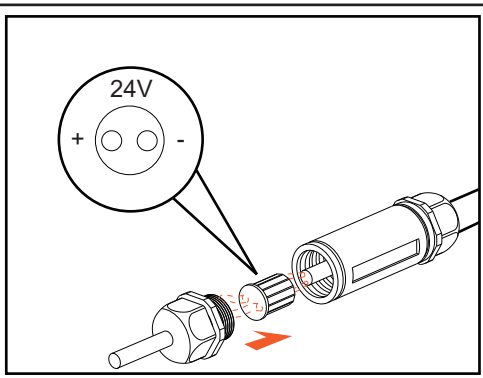

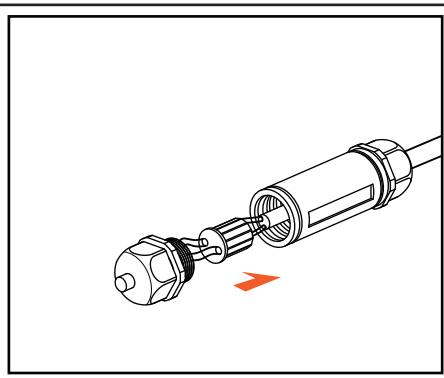

Address
Address: C T CORPORATION SYSTEM 28 LIBERTY STREET, NEW YORK, NY 10005
Email
Email: sales@cregini.com
Website: www.cregini.com
Phone Call
Phone: +1(224)378-4648

Installation Instructions

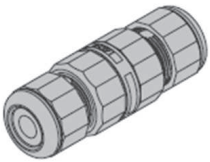

DC24V+	Red	L	Brown
DC24V-	Black	N	Blue
		GND	Yellow/Green

See the connector accessory instruction

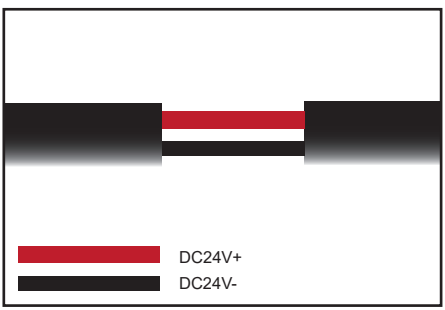

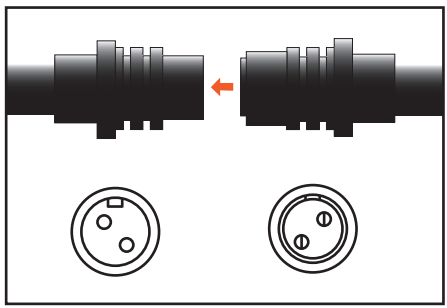

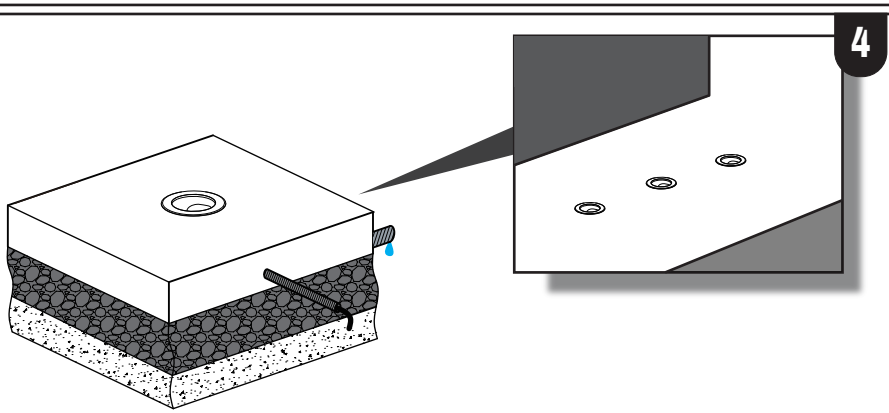

Address: C T CORPORATION SYSTEM 28 LIBERTY STREET, NEW YORK, NY 10005
Email: sales@cregini.com
Website: www.cregini.com
Phone: +1(224)378-4648

Power Supply and Electrical Installation(AC)

Mono-color Wiring Diagram (85-265V):

In this setup, the light connects directly to the power supply. No additional control is required as it is a constant-on setup.

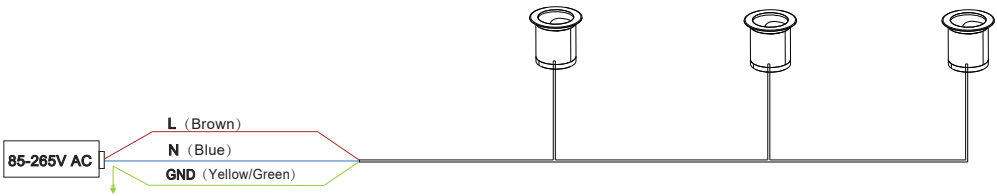

Power Supply and Electrical Installation(DC)

Mono-color Wiring Diagram (24V/DC):

In this setup, the light connects directly to the power supply. The power of a CC circuit is not more than 80% of the power supply. No additional control is required as it is a constant-on setup.

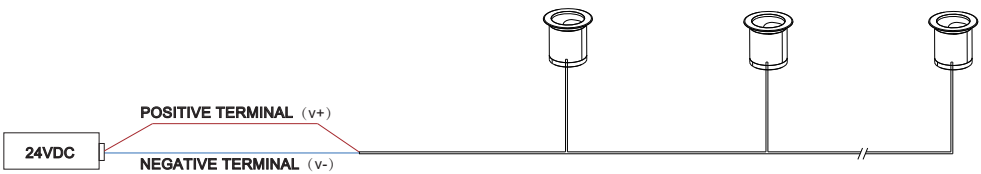

DMX512 Wiring Diagram (24V/DC):

This connects the wiring to the light fixture as described. The signal cable (3 wires for DMX, P(coding), DMX+, DMX-) is connected from the controller's output to the fixture's DMX input (IN) port. Multiple lights can be daisy-chained by connecting the DMX OUT one fixture to the DMX IN of the next. Terminate the last fixture in the chain with a DMX terminator (120 ohms) to avoid signal reflection.

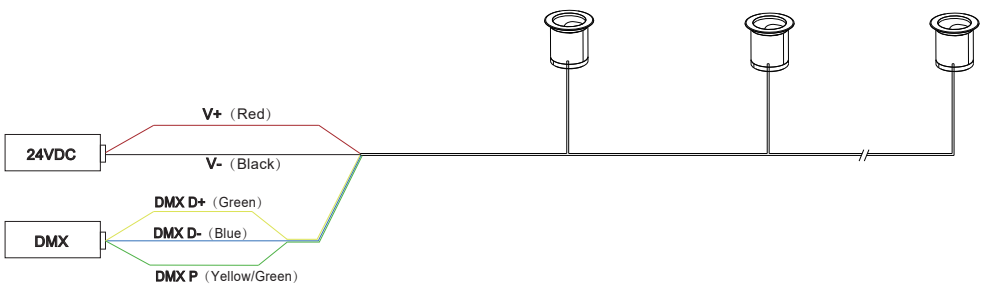

Address
Address: C T CORPORATION SYSTEM 28 LIBERTY STREET, NEW YORK, NY 10005
Send an Email
Email: sales@cregini.com
Website: www.cregini.com
Phone Call
Phone: +1(224)378-4648

WARNINGS AND REMARKS FOR INSTALLATION AND MAINTENANCE

Safety Instructions

To reduce risks of death, injury or property damage from fire, electric shock, falling parts, cuts, abrasions and other hazards, please read all warnings and instructions provided with the luminaire (including packaging and fixture labels).
The light source may only be replaced by the manufacturer, its service agent, or a similarly qualified professional.
Always power off before replacement to avoid electric shock.
The manufacturer accepts no liability for damage caused by improper use or installation.

Installation

Use high-quality components only. Avoid touching the LED light opening during installation or relamping.

IMPORTANT ⚠

To ensure secure operation, the luminaire housing must positioned precisely in relation to the mounting plate.

Cleaning And Maintenance

Clean the luminaire regularly with a clean, lint-free cleaners from dirt. Please do not clean the luminaire with using high-pressure liquids.

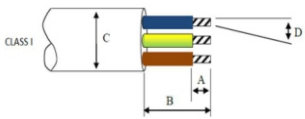

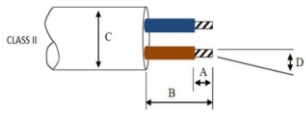

	Cable Details
A	6÷7 mm
A	< 25 mm
C	Pg11: 5÷10 mm PG13,5: 6÷12 mm(for DALI)
D	≤2.5 mmq

ATTENTIONS ⚠

Do not disassemble any parts.
Ground wire must be grounded (impedance <10Ω).
Wire must strictly per instructions to avoid failure/debug issues.
Do not pull exposed wires (risk of poor contact).
Store at ≤70℃10%-85% humidity. Use at -20℃~+40℃.
Installation/maintenance by professionals only.

WARNING ⚠

Confirm lamp parameters before installation.
Use correct wire diameter and series/parallel connection to avoid overheating from excessive current.
Optical radiation complies with IEC62471-2006 "exempt level".
Install/use strictly per instructions; do not modify lamp structure or internal parts.
Protect wires from sharp edges to avoid damage/wear.
Only electrical personnel should install the luminaire configuration device.
Check insulation of wires/components after installation.
Do not use in severely corrosive, water-submerged environments (e.g., acids/alkalis) or cover with thermal insulation pads.
Cut off power before installation to prevent electric shock.
Ensure voltage is within rated range.

Address
Address: C T CORPORATION SYSTEM 28 LIBERTY STREET, NEW YORK, NY 10005
Send an Email
Email: sales@cregini.com
Website: www.cregini.com
Phone Call
Phone: +1(224)378-4648