450 PATT IP

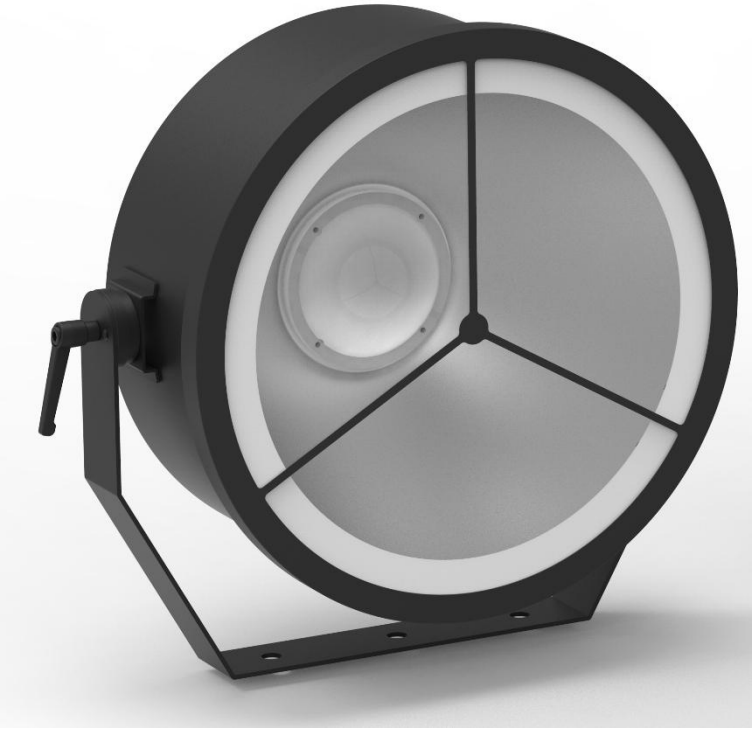

USER MANUAL

KEEP THIS USER MANUAL FOR FUTURE NEEDS

Thank you for your patronage!
We are confident that our excellent products and service can satisfy you.
For your own safety, please read this user manual carefully before installing the device.
In order to install, operate, and maintain the lighting safety correctly.
We suggest that the installation and operation should be done by the verified technician and follow the instruction strictly.

Every person involved with the installation, operation and maintenance of this device has to:
-be qualified
-follow carefully the instructions of this manual

1. MAINTENANCE

- To reduce the risk of electrical shock or fire, do not expose this unit to rain or moisture.
- Intermittently using will extend this item's service life.
- Please clear the fan ,fan net , and optical lens in order to keep good work state.
- Do not use the alcohol or any other organic solvent to wipe the shell.

2. STATEMENT

The product has perfect performance and integrity packing. All users should be strictly complying with the warning and operating instructions as stated. Or we aren't in charge of any result by misusing. Any damage resulting by misuse is not within the Company's warranty. Any fault or problem caused by neglecting the manual is also not in the charge of dealers.

Note: All information is subject to change without prior notice.

3. SAFETY PRECAUTION

- In order to guarantee the product's life, please don't put it in the damp places or even the environment over 60degress.
- Always mount this unit in safe and stable matter.
- Install or dismantle should operate by professional engineer.
- Using lamp，the change rate of power voltage should be within±10%，If the voltage is too high，it will shorten the light's life; If it's not enough, will influence the effect.
- Please restart it 20 minutes later after turning off light , until full-cooling. Frequent switching will reduce the life span of lamps and bulbs; intermittent using will improve the life of bulbs and lamps.
- In order to make sure the product is used well, please read the Manual carefull

TECHNICAL PARAMETERS

Light Source

- Main Light: RGBLAC 6-in-1 LED, 100W per color
- Return Light: 24×3W RGB LED
- Auxiliary Light: 60×0.5W RGB LED

Optical

- Main lens diameter: 330mm
- Beam Angle: 55°
- Field angle: 85°

- Color Temperature: 1800~8500K
- Average Lifetime: 50000H

Effects

- Strobe: 1~25Hz
- LED refresh frequency: 1K~25KHz

Control & Programming

- Control Channels: 9 modes (1CH/3CH/6CH/13CH/21CH/10CH/15CH/12CH/37CH)
- Protocol: Standard DMX512, RDM
- Data Connection: 3-pin XLR In/Out
- Display: OLED Control Panel

Software

- Via DMX signal to update
- Intelligent temperature protection for longer LED life

Light Body Structure And Heat Dissipation

- Stainless steel + aluminum alloy body
- Aluminum heatsink + silent fan
-

Power

- Input Voltage: AC100V~240V 50/60Hz
- Rated Power: 450W

Others

- Protection Rating: IP65
- Working environment: -40℃ ~ 45℃
- Startup environment: -20℃ ~ 45℃

Dimensions & Weight

- Size: 488×422×166mm
- N.W.: 6.2kg
- Packing: One pack one carton

FACTORY CONFIGURATION

- User manual
- Power cable
- DMX cable
- Safety rope

FIXTURE SIZE

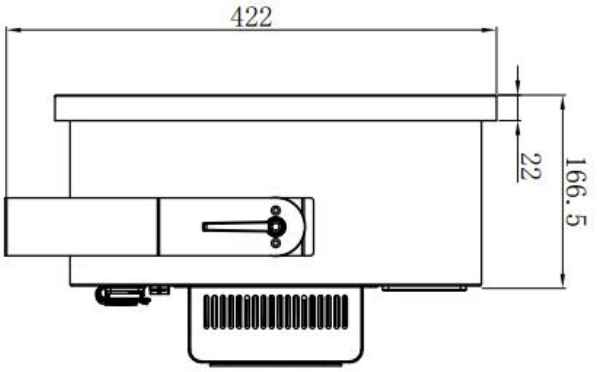

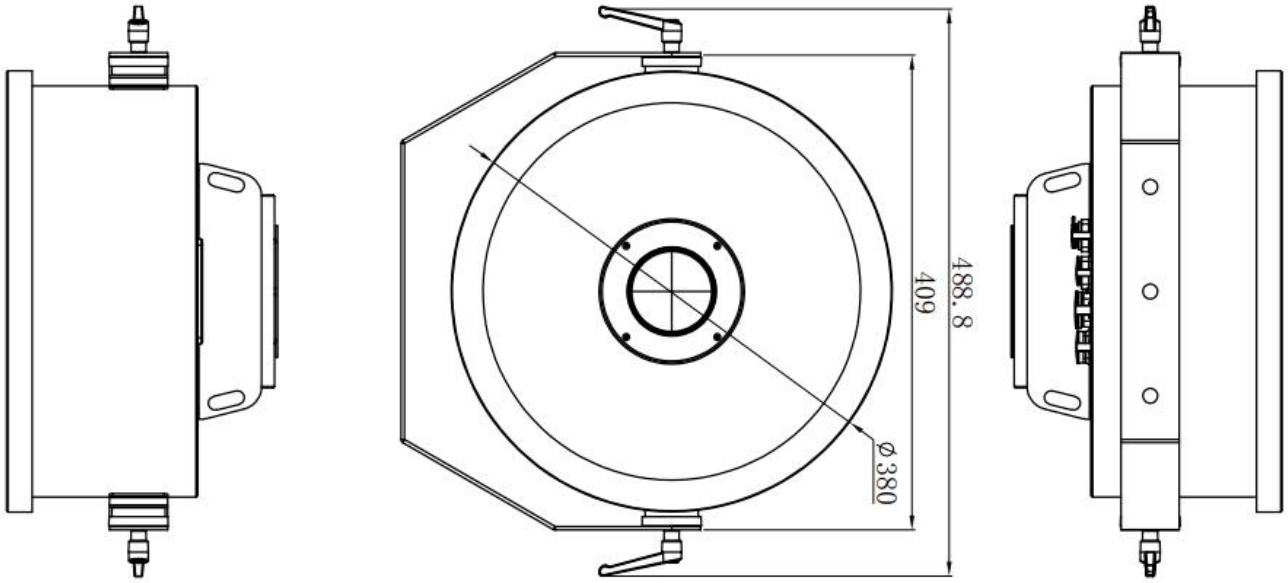

INSTRUCTIONS

1. DIAGRAM SECTION：



K1: Menu key K2: Confirm key K3: Add key K4: Subtract key

Lock screen unlock: Long press the menu button for 4-5 seconds.

2. DISPLAY WINDOW FUNCTION COMPARISON TABLE

MENU	Dmx Addr	001 - 512	
	Fixture	DMX Mode	1CH/3CH/12CH/14CH/23CH/35CH/22CH/27CH/37CH
		Run Mode	DMX / Host / Auto
		Fan Mode	Auto / Low / High
		Led Order	Fore / Back
		Dim Curve	Lin1 / Lin2 / Lin3
		Dim Mode	Basc/S1/TV/Arch/Thea/S2
		Fre	1K/2K/5K/7K/9K/12K/14K/16K/19K/22K/25K
		Tungsten	OFF / ON
		Power	Full / Half
		DMX Keep	OFF / ON
		Card Fade	OFF / 1 - 21
		Keylock	OFF / ON
		Send	OFF / ON
	Manual	Dimmer	000 - 255
		Dim Fine	000 - 255
		Main St	000 - 255
		Main R	000 - 255
		.....	.....
	Info	Time	Time Now
			Total Time
			Boot Count
		Temp	Main Temp
			Ring Temp
		Version	Panel
	Factory	Password	000 - 255
		Main Dim	000 - 255
		Main R	000 - 255
		Main G	000 - 255
		Main B	000 - 255
		Main L	000 - 255
		.....	.....
		.....	.....
	Reset	Factory	OFF / RUN
	Display	Language	CH / EN
		Show Flip	OFF / ON
		Show Mode	30s / Show

450 PATT IP Channel Table

1 CH	3 CH	12 CH	14 CH	23 CH	35 CH	22 CH	27 CH	37 CH	Channel Name	Value	Illustrate
1	1	/	/	1	1	1	1	1	Dimmer	0 - 255	
/	/	/	/	2	2	2	2	2	Dimmer Fine	0 - 255	
/	2	/	/	3	3	3	3	3	Main Strobe	0 - 25	OFF
										26 - 51	ON
										52 - 77	Strobe from slow to fast
										78 - 103	ON
										104 - 129	Slow Bright Strobe, Slow to Fast
										130 - 155	ON
										156 - 181	Slow Fade Strobe, Slow to Fast
										182 - 207	ON
										208 - 233	Random Strobe, Slow to Fast
										234 - 255	ON
/	/	1	1	4	4	4	/	4	Main Red	0 - 255	
/	/	/	/	/	5	/	/	5	Main R Fine	0 - 255	
/	/	2	2	5	6	5	/	6	Main Green	0 - 255	
/	/	/	/	/	7	/	/	7	Main G Fine	0 - 255	
/	/	3	3	6	8	6	/	8	Main Blue	0 - 255	
/	/	/	/	/	9	/	/	9	Main B Fine	0 - 255	
/	/	4	4	7	10	/	/	10	Main Lemon	0 - 255	
/	/	/	/	/	11	/	/	11	Main L Fine	0 - 255	
/	/	5	5	8	12	/	/	12	Main Amber	0 - 255	
/	/	/	/	/	13	/	/	13	Main A Fine	0 - 255	
/	/	6	6	9	14	/	4	14	Main Cyan	0 - 255	
/	/	/	/	/	15	/	5	15	Main C Fine	0 - 255	
/	/	/	/	/	/	/	6	/	Main Magenta	0 - 255	
/	/	/	/	/	/	/	7	/	Magenta Fine	0 - 255	
/	/	/	/	/	/	/	8	/	Main Yellow	0 - 255	
/	/	/	/	/	/	/	9	/	Yellow Fine	0 - 255	

/	3	/	/	10	16	7	10	16	CTO	0 - 17	Channel 3: 6500K, with bulb effect enabled: 3200K; other channels: N/A
										18 - 85	1800K - 8500K
										86 - 255	8500K
/	/	/	/	/	17	/	11	17	CTO Fine	0 - 255	
/	/	/	/	11	18	8	12	18	Reserve	0 - 255	
/	/	/	/	12	19	9	13	19	Color Card	0	No Function
										1 - 179	Color Card
										180 - 201	Color Scroll, Clockwise (Fast to Slow)
										202 - 207	Stop
										208 - 229	Color Scroll, Counterclockwise (Slow to Fast)
										230 - 234	Stop
										235 - 239	Random Color, Fast
										240 - 244	Random Color, Medium
										245 - 249	Random Color, Slow
										250 - 255	Random Color, Stop
/	/	7	7	13	20	10	14	20	Ring Red	0 - 255	
/	/	8	8	14	21	11	15	21	Ring Green	0 - 255	
/	/	9	9	15	22	12	16	22	Ring Blue	0 - 255	
/	/	/	10	16	23	13	17	23	Ring Strobe	0 - 25	OFF
										26 - 51	ON
										52 - 77	Strobe, Slow to Fast
										78 - 103	ON
										104 - 129	Slow Bright Strobe, Slow to Fast
										130 - 155	ON
										156 - 181	Slow Fade Strobe, Slow to Fast
										182 - 207	ON
										208 - 233	Random Strobe, Slow to Fast

										234 - 255	ON
/	/	/	11	17	24	14	18	24	Ring Effect	0 -5	No Function
										6 - 13	Effect Cycle
										14 - 21	Effect 2
										22 - 29	Effect 3
										...	...
										214 - 221	Effect 27
										222 - 229	Effect 28
										230 - 255	Effect 29
/	/	/	12	18	25	15	19	25	Effect Speed	0 - 255	Speed: Slow to Fast
/	/	/	/	/	26	16	20	26	Ring Fade	0 - 255	Speed: Fast to Slow
/	/	/	13	19	27	17	21	27	Ring BG Color	0	No Function
										1 - 36	Red (Dim to Bright)
										37	Blackout
										38 - 73	Green (Dim to Bright)
										74	Blackout
										75 - 110	Blue (Dim to Bright)
										111	Blackout
										112 - 147	Red & Green (Dim to Bright)
										148	Blackout
										149 - 184	Red & Blue (Dim to Bright)
										185	Blackout
										185 - 221	Green & Blue (Dim to Bright)
										222	Blackout
										223 - 255	Red, Green & Blue (Dim to Bright)
/	/	10	/	/	28	/	/	28	Ref Red	0 - 255	
/	/	11	/	/	29	/	/	29	Ref Green	0 - 255	
/	/	12	/	/	30	/	/	30	Ref Blue	0 - 255	
/	/	/	/	/	/	/	/	31	Ref Strobe	0 - 25	OFF
										26 - 51	ON
										52 - 77	Strobe, Slow to Fast

										78 - 103	ON
										104 - 129	Slow Bright Strobe, Slow to Fast
										130 - 155	ON
										156 - 181	Slow Fade Strobe, Slow to Fast
										182 - 207	ON
										208 - 233	Random Strobe, Slow to Fast
										234 - 255	ON
/	/	/	/	20	31	18	22	32	Ref Effect	0 - 5	No Function
										6 - 15	Effect 1
										16 - 25	Effect 2
										...	
										216 - 225	Effect 22
										226 - 235	Effect 23
										236 - 255	Effect 24
/	/	/	/	21	32	19	23	33	Effect Speed	0 - 255	Speed: Slow to Fast
/	/	/	/	/	/	20	24	34	Ref Fade	0 - 255	Speed: Fast to Slow
/	/	/	14	22	33	21	25	35	Ref BG Color	0	No Function
										1 - 36	Red (Dim to Bright)
										37	Blackout
										38 - 73	Green (Dim to Bright)
										74	Blackout
										75 - 110	Blue (Dim to Bright)
										111	Blackout
										112 - 147	Red & Green (Dim to Bright)
										148	Blackout
										149 - 184	Red & Blue (Dim to Bright)
										185	Blackout
										185 - 221	Green & Blue (Dim to Bright)
										222	Blackout
										223 - 255	Red, Green & Blue (Dim to Bright)

/	/	/	/	/	34	/	26	36	Dimmer Speed	0	No Function
										1 - 20	Dimming Speed: Standard
										21 - 40	Dimming Speed: Stage
										41 - 60	Dimming Speed: TV
										61 - 80	Dimming Speed: Architectural
										81 - 100	Dimming Speed: Theatre
										101 - 120	Dimming Speed: Stage 2
										121 - 141	Color Card Fade Time: Larger value = longer fade in/out
										142 - 149	No Function
										150 - 154	Tungsten Effect: ON
										155 - 159	Tungsten Effect: OFF
										160 - 255	No Function
/	/	/	/	23	35	22	27	37	Fcuntion	0 - 24	No Function
										25 - 34	Output Mode: Full Power
										35 - 44	Output Mode: Low Power (Fan speed reduced)
										45 - 99	No Function
										100 - 105	LED Frequency: 2KHz
										106 - 111	LED Frequency: 5KHz
										112 - 117	LED Frequency: 7KHz
										118 - 123	LED Frequency: 9KHz
										124 - 129	LED Frequency: 12KHz
										130 - 135	LED Frequency: 14KHz
										136 - 141	LED Frequency: 16KHz
										142 - 147	LED Frequency: 19KHz
										148 - 153	LED Frequency: 22KHz
										154 -	LED Frequency:

										168	25KHz
										169 - 200	No Function
										201 - 210	Dimming Curve: Linear
										211 - 220	Dimming Curve: Square
										221 - 230	Dimming Curve: Inverse Square
										231 - 240	Dimming Curve: S-Curve
										241 - 255	No Function

Upgrade mode

Ensure the connection and power of the signal line. When the interface is in the DMX address interface, set the advanced upgrade through the host computer.

The program code is 12345678, the master-slave flag is 00, and the version number should be different from the last upgrade

REMARK

The product has perfect performance and intergrity packing. All users should be strictly comply with the warning and operating

instructions as stated. Or we aren't in charge of any result by misusing.

Any damage resulting by misuse is not within the Company's warranty.

Any fault or problem caused by neglecting the manual is also not in the charge of dealers.

Errors and omissions for every information given in this manual excepted.

All information is subject to change without prior notice.